PC SPACER SUPPORT

MATERIAL:NYLON 66 (UL)
FLAME CLASS :94V-2/94V-0
COLOR:NATURAL/BLACK/DEEP BLUE
UNIT:mm

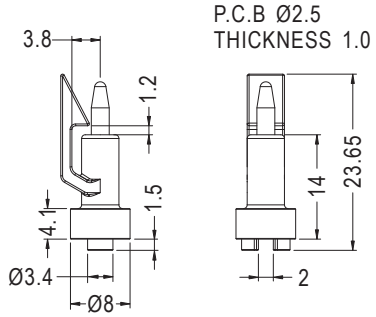

PART NO	PACKAGE
ULCI-11	1000

PC SPACER SUPPORT

MATERIAL:NYLON 66 (UL)
FLAME CLASS :94V-2
COLOR:NATURAL
UNIT:mm

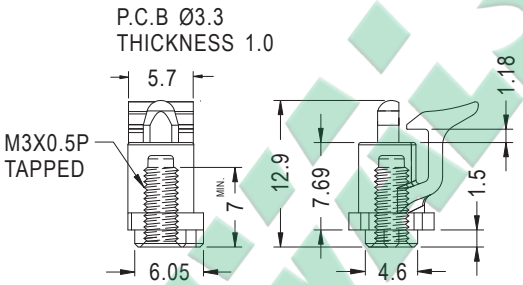

PART NO	PACKAGE
ULCD-7.8	1000

PC SPACER SUPPORT

MATERIAL:NYLON 66 (UL)
FLAME CLASS :94V-2
COLOR:NATURAL
UNIT:mm

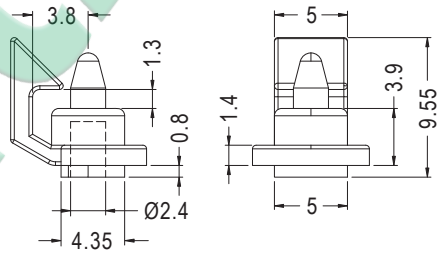

PART NO	PACKAGE
ULCIJ-4	1000

PC SPACER SUPPORT

MATERIAL:NYLON 66 (UL)
FLAME CLASS:94V-2
COLOR:NATURAL
UNIT:mm

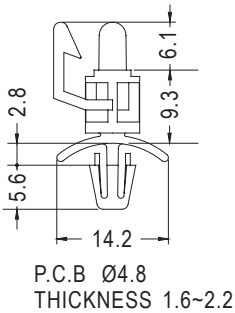

PART NO	PACKAGE
ULCB-9S	1000